[Minor revision: April 7, 2014]

Angelo State University
Operating Policy and Procedure

OP 40.10: **Underground Trenching of Utilities**

DATE: April 7, 2014

PURPOSE: The purpose of this Operating Policy/Procedure (OP) is to establish the depth of installation of all types of utilities by trenching, ditching, or boring to maximize the protection of existing utilities, and to protect new installations from being disturbed or causing disruption of service of that utility because of improper installation.

REVIEW: This OP will be reviewed in April every 5 years, or as needed, by the director of facilities planning and construction with recommended revisions forwarded through the vice president for finance and administration to the president by May 15 of the same year.

POLICY/PROCEDURE

1. Trenching and/or Excavating Notification.

The contractor shall call the following offices at least 48 hours prior to start of work:

a. Non Angelo State University-owned utilities (commercial or city-owned utilities such as water, gas, sewer, telephone, TV, cable, and electric):

Texas Excavation Safety System (Dig TESS) 1-800-344-8377

b. Angelo State University-owned utilities (water, gas, sewer, electric, irrigation):

Facilities Management office (325) 942-2355

2. Temporary color-coded surface markings (e.g., chalk) shall be used to indicate the location or route of active and out-of-service buried lines. Paint shall not be used for temporary markings. To increase visibility, color-coded markers indicate the name, initials, or logo of the company or organization that owns or operates the line. Marks placed by anyone other than line owner/operator or its agent indicate the identity of the designating firm. Multiple lines in a joint trench are marked in tandem. If the surface over the buried line is to be removed, supplementary offset markings shall be used. Offset markings are on a uniform alignment and clearly indicate that the actual facility is a specific distance away.

3. The Uniform Color Code of the American Public Works Association, using the ANSI Z535.1 "Safety Colors for Temporary Marking and Facility Identification" standard (as appended to this policy), shall be the official color scheme of Angelo State University. It designates the colors as follows:

a. White – proposed excavation

b. Pink – temporary surveying marks

c. Red – electrical power and lighting

d. Yellow – gas, steam and gaseous materials

e. Orange – communication, alarm and traffic signals

f. Blue – potable water

g. Purple – reclaimed water, irrigation and slurry lines

h. Green – sewer and drain lines

4. Proposed excavation shall be marked using white marks to clearly indicate the location, route or boundary. Surface marks on roadways should not exceed 1.5 inches by 18 inches (40 mm by 450 mm).

5. The excavator shall observe a tolerance zone of 24 inches. Tolerances shall be measured horizontally from the temporary surface marking. Any excavation within the tolerance zone shall be performed with non-powered hand tools and/or non-invasive method(s) until the facility is exposed.

6. Minimum cover requirements to top of pipe or insulation for utilities:

a. Low pressure gas ounces 36 inches

b. High pressure gas pounds 46 inches

c. Alarm systems 42 inches

d. Security systems 42 inches

e. Domestic water 36 inches

f. Irrigation mains 24 inches

g. Irrigation laterals 18 inches

h. Communication 42 inches

i. Electrical primary voltage 42 inches including concrete cap

j. Electrical secondary voltage 36 inches (less than 600 volts)

k. Direct bury steam/condensate return 36 inches

l. Air 36 inches

m. Chilled water 36 inches

n. Reverse osmosis (R-O) water 36 inches

7. Warning tape for the following utilities should be 12 to 16 inches below grade in ditch lines: gas, alarm systems, security systems, communication, and all electric, direct bury steam, air, chilled water, and reverse osmosis water.

8. Piping that is non-metallic must have a continuous, coated (protected from ground) wire (i.e. AWG 12) installed for locating purposes (e.g., natural gas, R-O water, domestic water). Metallic warning tape shall not be considered equivalent.

9. Modifications or changes of utility installation depths from the indicated depths of installation, due to other utilities and/or underground obstacles, should be approved through the Facilities Management Department and Facilities Planning and Construction.

10. Any time pavement or concrete is to be removed; Grounds Maintenance, Building Maintenance, and Mechanical Maintenance shall be contacted prior to excavation.

11. A concrete "t-cap" of no less than 12 inches either side of a trench and no less than 8 inches thick shall be installed where pavement is disturbed.

12. A copy of this OP shall be placed into all ASU bid documents where excavation is necessary.

13. A copy of this OP shall be provided to all contractors doing excavation work on the campus of Angelo State University. Facilities Planning and Construction will be responsible for this distribution.

American Public Works Association

UTILITY MARKING GUIDE

WHITE - Proposed Excavation

PINK - Temp. Survey Markings

RED - Electrical Power and Lighting

YELLOW - Gas, Steam and Gaseous Materials

ORANGE - Communication, Alarm and Traffic Signal

BLUE - Potable Water

PURPLE - Reclaimed Water, Irrigation and Slurry Lines

GREEN - Sewer and Drain
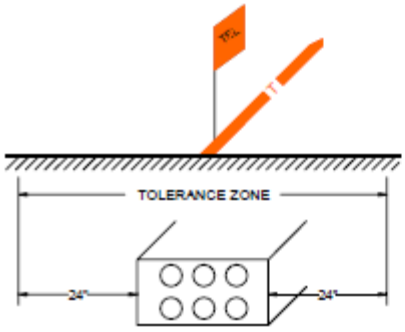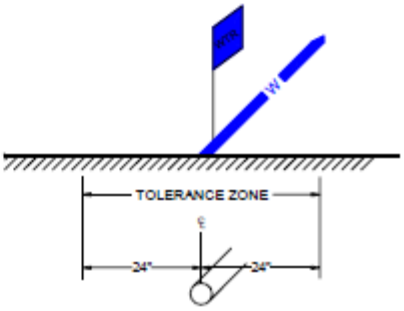
TYPICAL MARKING